CONNECTOR DRAWING

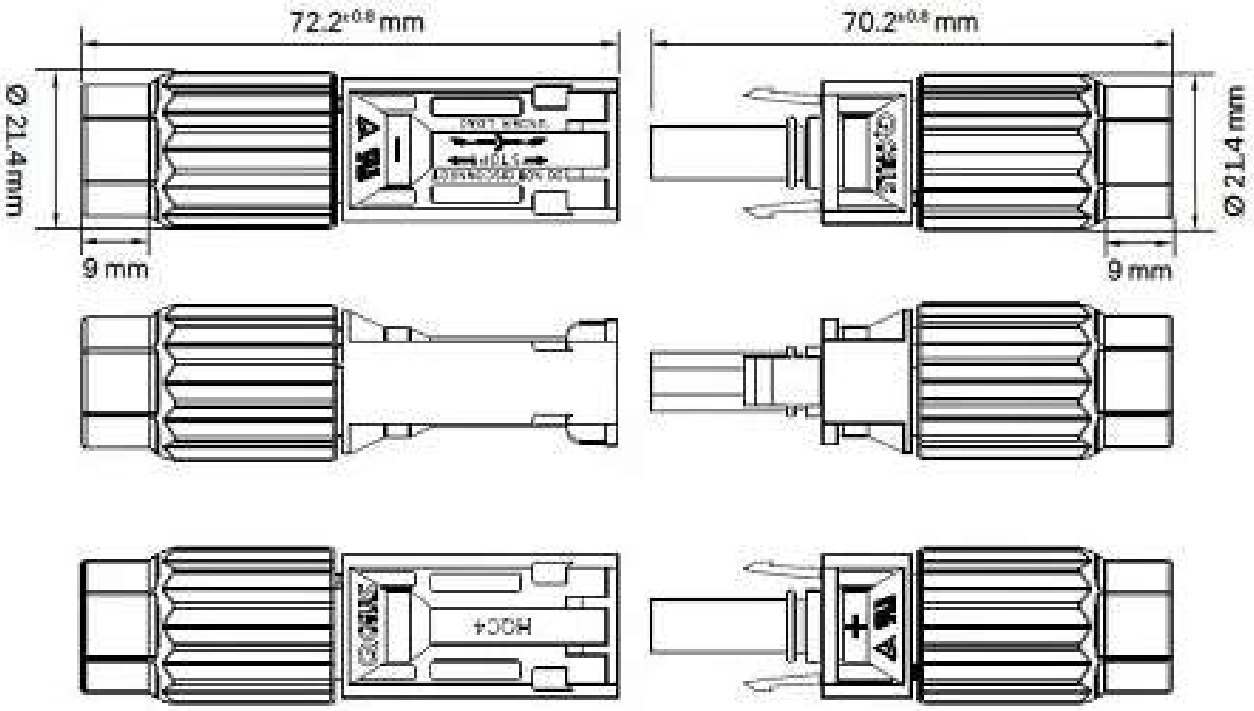

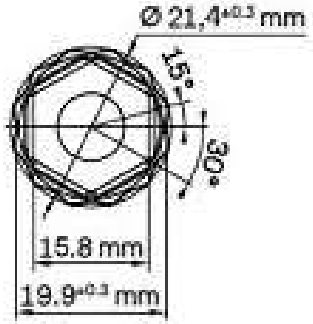

PIN (MALE)

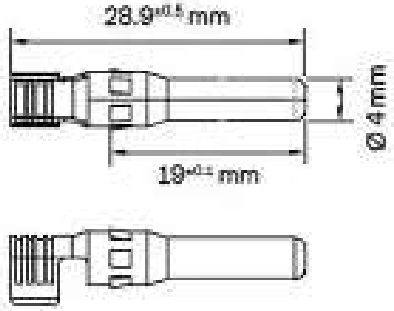
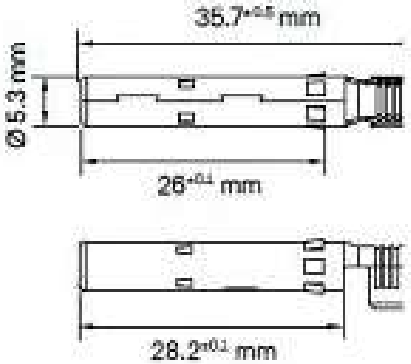
CONTACT (FEMALE)